특허증

CERTIFICATE OF PATENT

특 허 Patent Number	제 10-2327947 호
출원번호 Application Number	제 10-2020-0006214 호
출원일 Filing Date	2020년 01월 16일
등록일 Registration Date	2021년 11월 12일

발명의 명칭 Title of the Invention

정보 중심 사물인터넷 환경에서 Push 기반 데이터의 브로드캐스팅 제어 방법

특허권자 Patentee

홍익대학교세종캠퍼스산학협력단(164771-*****)**
세종특별자치시 조치원읍 세종로 2639 ()

발명자 Inventor

등록사항란에 기재

위의 발명은 「특허법」에 따라 특허원부에 등록되었음을 증명합니다.

This is to certify that, in accordance with the Patent Act, a patent for the invention has been registered at the Korean Intellectual Property Office.

2021년 11월 12일

QR코드로 현재기준 등록사항을 확인하세요

특허청장

COMMISSIONER,
KOREAN INTELLECTUAL PROPERTY OFFICE

김 용 래

특허청
Korean Intellectual Property Office

특허증

CERTIFICATE OF PATENT

특 허 Patent Number	제 10-2260781 호
출원번호 Application Number	제 10-2020-0052659 호
출원일 Filing Date	2020년 04월 29일
등록일 Registration Date	2021년 05월 31일

발명의 명칭 Title of the Invention

사물 인터넷을 위한 명명 데이터 네트워킹 기반 에지 클라우드 컴퓨팅 통합 시스템

특허권자 Patentee

홍익대학교세종캠퍼스산학협력단(164771-*****)**
세종특별자치시 조치원읍 세종로 2639 ()

발명자 Inventor

등록사항란에 기재

위의 발명은 「특허법」에 따라 특허등록원부에 등록되었음을 증명합니다.

This is to certify that, in accordance with the Patent Act, a patent for the invention has been registered at the Korean Intellectual Property Office.

2021년 05월 31일

QR코드로 현재기준 등록사항을 확인하세요

특허청장

COMMISSIONER,
KOREAN INTELLECTUAL PROPERTY OFFICE

김 용 래

특허청

Korean Intellectual Property Office

특허증

CERTIFICATE OF PATENT

특 허 제 10-2310212 호
Patent Number

출원번호 제 10-2020-0060998 호
Application Number

출원일 2020년 05월 21일
Filing Date

등록일 2021년 09월 30일
Registration Date

발명의 명칭 Title of the Invention

5G 네트워크에서 정보 중심 네트워킹 기반의 엣지 컴퓨팅 활성화 방법

특허권자 Patentee

홍익대학교세종캠퍼스산학협력단(164771-*****)**
세종특별자치시 조치원읍 세종로 2639 ()

발명자 Inventor

등록사항란에 기재

위의 발명은 「특허법」에 따라 특허원부에 등록되었음을 증명합니다.

This is to certify that, in accordance with the Patent Act, a patent for the invention has been registered at the Korean Intellectual Property Office.

2021년 09월 30일

QR코드로 현재기준 등록사항을 확인하세요

특허청장
COMMISSIONER,
KOREAN INTELLECTUAL PROPERTY OFFICE

김 용 래

특허청
Korean Intellectual Property Office

US 20240303478A1

(19) United States

(12) Patent Application Publication

(10) Pub. No.: US 2024/0303478 A1

(43) Pub. Date: Sep. 12, 2024

ULLAH et al.

(54) **COOPERATIVE TRAINING MIGRATION**

(71) Applicant: **RAKUTEN MOBILE, INC.**, Tokyo (JP)

(72) Inventors: **Rehmat ULLAH**, Belfast (GB); **Di WU**, Belfast (GB); **Paul HARVEY**, Tokyo (JP); **Peter KILPATRICK**, Belfast (GB); **Ivor SPENCE**, Belfast (GB); **Blesson VARGHESE**, Belfast (GB)

(21) Appl. No.: **17/770,049**

(22) PCT Filed: **Mar. 23, 2022**

(86) PCT No.: **PCT/US2022/021587**

§ 371 (c)(1),
(2) Date: **Apr. 19, 2022**

Related U.S. Application Data

(60) Provisional application No. 63/270,518, filed on Oct. 21, 2021.

Publication Classification

(51) **Int. Cl.**
G06N 3/08 (2006.01)

(52) **U.S. Cl.**
CPC ***G06N 3/08*** (2013.01)

(57) **ABSTRACT**

Cooperative training migration is performed by training, cooperatively with a computational device through a network, the neural network model, creating, during the iterations of training, a data checkpoint, the data checkpoint including the gradient values and the weight values of the server partition, the loss value, and an optimizer state, receiving, during the iterations of training, a migration notice, the migration notice including an identifier of a second edge server, and transferring, during the iterations of training, the data checkpoint to the second edge server.

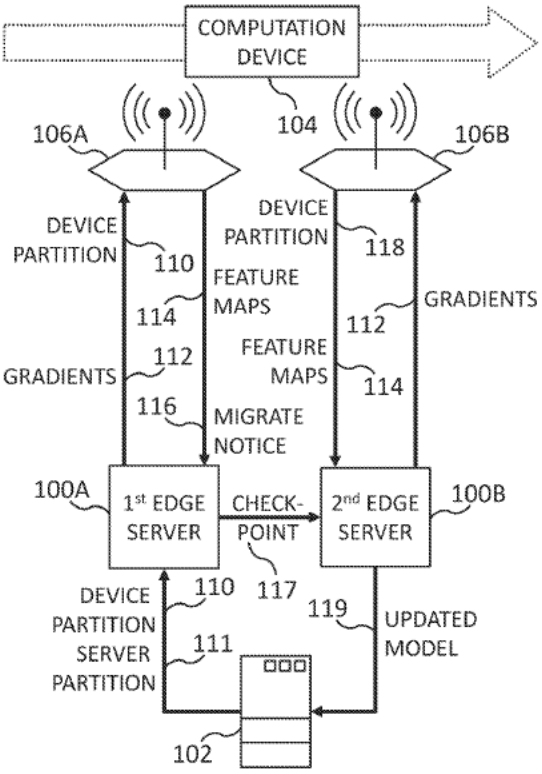

US 20250086474A1

(19) United States
(12) Patent Application Publication
WU et al.
(10) Pub. No.: US 2025/0086474 A1
(43) Pub. Date: Mar. 13, 2025

(54) **COLLABORATIVE TRAINING WITH BUFFERED ACTIVATIONS**

(71) Applicant: **Rakuten Mobile, Inc.**, Tokyo (JP)

(72) Inventors: **Di WU**, St Andrews (GB); **Blesson VARGHESE**, St Andrews (GB); **Philip RODGERS**, London (GB); **Rehmat ULLAH**, St Andrews (GB); **Peter KILPATRICK**, Belfast (GB); **Ivor SPENCE**, Belfast (GB)

(21) Appl. No.: **18/247,447**

(22) PCT Filed: **Dec. 21, 2022**

(86) PCT No.: **PCT/US2022/053601**

§ 371 (c)(1),
(2) Date: **Mar. 31, 2023**

Related U.S. Application Data

(60) Provisional application No. 63/386,959, filed on Dec. 12, 2022.

Publication Classification

(51) **Int. Cl.**
G06N 3/098 (2006.01)

(52) **U.S. Cl.**
CPC *G06N 3/098* (2023.01)

(57) **ABSTRACT**

Collaborative training with buffered activations is performed by partitioning a plurality of layers of a neural network model into a device partition and a server partition; transmitting, to a computation device, the device partition, training, collaboratively with the computation device through a network, the neural network model by applying the server partition to a set of activations to obtain a set of output instances, the set of activations obtained by one of receiving, from the computation device, the set of activations as output from the device partition, or reading, from an activation buffer, the set of activations as previously recorded, applying a loss function relating activations to output instances to each output instance among the current set of output instances to obtain a set of loss values, and computing a set of gradient vectors for each layer of the server partition based on the set of loss values.

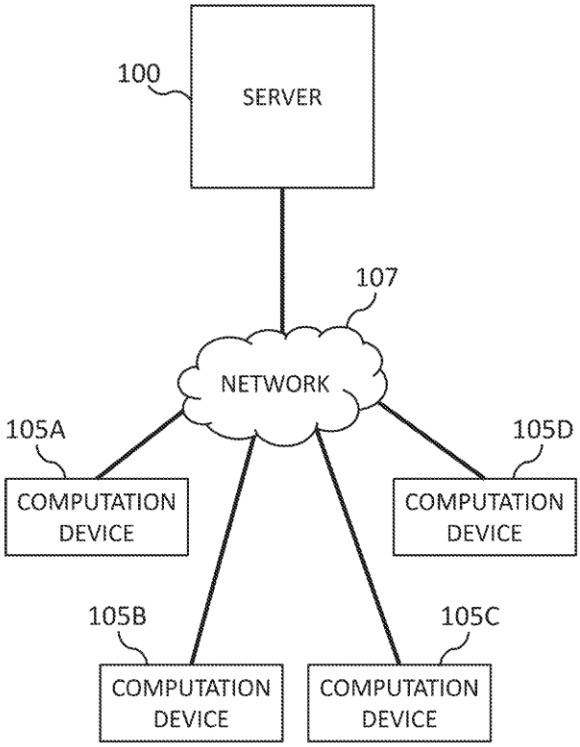

US 20250077887A1

(19) United States
(12) Patent Application Publication
WU et al.
(10) Pub. No.: US 2025/0077887 A1
(43) Pub. Date: Mar. 6, 2025

(54) **COLLABORATIVE TRAINING WITH COMPRESSED TRANSMISSIONS**

(71) Applicant: **Rakuten Mobile, Inc.**, Tokyo (JP)

(72) Inventors: **Di WU**, St Andrews (GB); **Blesson VARGHESE**, St Andrews (GB); **Philip RODGERS**, London (GB); **Rehmat ULLAH**, St Andrews (GB); **Peter KILPATRICK**, Belfast (GB); **Ivor SPENCE**, Belfast (GB)

(21) Appl. No.: **18/028,765**

(22) PCT Filed: **Dec. 12, 2022**

(86) PCT No.: **PCT/US2022/052496**

§ 371 (c)(1),
(2) Date: **Mar. 28, 2023**

Publication Classification

(51) **Int. Cl.**
G06N 3/098 (2006.01)
G06N 3/0455 (2006.01)

(52) **U.S. Cl.**
CPC ***G06N 3/098*** (2023.01); ***G06N 3/0455*** (2023.01)

(57) **ABSTRACT**

Collaborative training with compressed transmissions is performed by partitioning a plurality of layers of a neural network model into a device partition and a server partition, combining a plurality of encoding layers of an auto-encoder neural network with the device partition, wherein a largest encoding layer among the plurality of encoding layers is adjacent a layer of the device partition bordering the server partition, combining a plurality of decoding layers of the auto-encoder neural network with the server partition, wherein a largest decoding layer among the plurality of decoding layers is adjacent a layer of the server partition bordering the device partition, transmitting, to a computation device, the device partition combined with the plurality of encoding layers, and training, collaboratively with the computation device through a network, the neural network model.

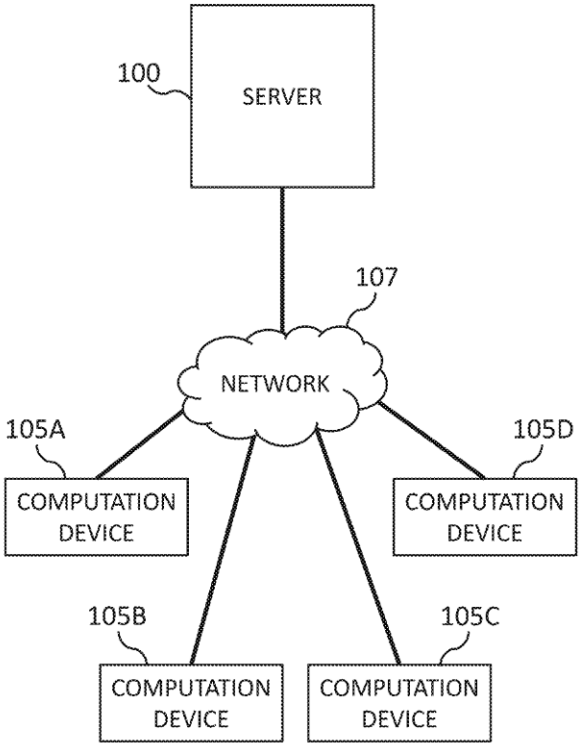

US 20230016827A1

(19) United States
(12) Patent Application Publication
WU et al.
(10) Pub. No.: US 2023/0016827 A1
(43) Pub. Date: Jan. 19, 2023

(54) **ADAPTIVE OFFLOADING OF FEDERATED LEARNING**

(71) Applicant: **RAKUTEN MOBILE, INC.**, Tokyo (JP)

(72) Inventors: **Di WU**, Belfast (GB); **Rhemat ULLAH**, Belfast (GB); **Paul HARVEY**, Tokyo (JP); **Peter KILPATRICK**, Belfast (GB); **Ivor SPENCE**, Belfast (GB); **Blesson VARGHESE**, Belfast (GB)

(21) Appl. No.: **17/523,920**

(22) Filed: **Nov. 11, 2021**

Related U.S. Application Data

(60) Provisional application No. 63/219,797, filed on Jul. 8, 2021.

Publication Classification

(51) **Int. Cl.**
G06N 3/08 (2006.01)
G06N 3/04 (2006.01)

(52) **U.S. Cl.**
CPC ***G06N 3/08*** (2013.01); ***G06N 3/04*** (2013.01)

(57) **ABSTRACT**

Adaptive offloading of federated learning is performed by partitioning, for each of a plurality of computational devices, a plurality of layers of a neural network model into a device partition and a server partition based on a computational capability attribute of the computational device and a network bandwidth attribute of the computational device, training, cooperatively with respect to each computational device through the network, the neural network model, and aggregating the updated weight values of neural network model instances received from the plurality of computational devices to generate an updated neural network model.

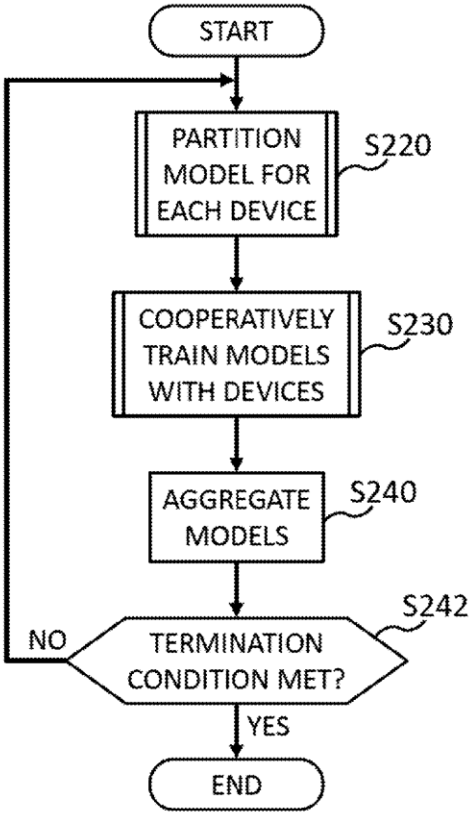

International Conference on Trends and Innovations in Smart Technologies (ICTIST'22)

CERTIFICATE OF APPRECIATION

This certificate is awarded to

Dr. Rehmat Ullah

for his contribution as a

KEYNOTE SPEAKER

at the

1st International Conference on Trends and Innovations in Smart Technologies

October 07-08, 2022

London, United Kingdom

Dr. Mariya Ouaissa
General Chair

ICTIST'22
7 - 8 October 2022

Dr. Inam Ullah Khan
General Chair

KEYNOTE SESSION

AI at the Edge: The Future of Distributed Intelligence

ABOUT SESSION

Mode: Online

19 NOV
2:00 P.M - 3:00 P.M
Video Conference Hall
University of Engineering and Technology,Peshawar

Traditional machine learning (ML) relies on centralized cloud infrastructures, leading to issues of bandwidth, latency, and data privacy. With the surge of mobile and IoT devices producing vast distributed data, cloud-only computation has become inefficient. This talk explores how AI at the edge—powered by federated learning and decentralized intelligence—overcomes these challenges. It will cover techniques like model splitting, quantization, pruning, and checkpointing to improve edge AI efficiency, along with experimental insights for building scalable, privacy-preserving, and energy-efficient distributed systems.

ABOUT SPEAKER

Dr. Rehmat Ullah
Associate Professor,
School of Computing
Newcastle University, United Kingdom

Dr. Rehmat Ullah is an Associate Professor at Newcastle University and a member of the EPSRC National Edge AI Hub, UK. His research focuses on edge intelligence, distributed systems, and privacy-preserving federated learning. He has published widely in top IEEE and ACM venues and holds eight patent applications in distributed AI.

ICGHIT 2018

International Conference on Green and Human Information Technology

Presents

Best Paper Award

To

Muhammad Khalil Afzal[1], **Rehmat Ullah**[2], Byung-Seo Kim[2], Sung Won Kim[3]

(1 : COMSATS Institute of Information Technology, Wah, Pakistan / 2 : Hongik University, Korea, 3: Yeungnam University, Korea)

For the paper titled

A Reliable and Scalable GroupCast Block Acknowledgement Scheme for Video Multicast over IEEE 802.11aa Standard

Kyutae Lee

General Co-Chair of ICGHIT 2018
Dr. Kyutae Lee

Hyunsik Ahn

General Co-Chair of ICGHIT 2018
Dr. Hyunsik Ahn

ELSEVIER

Editor's Choice Award 2024

INTERNET OF THINGS

Blockchain Applications for Internet of Things -A survey

I Khan, Y Majib, R Ullah, O Rana

Volume 27, October 2024, 101254

Selected on the grounds of impact within the community

Sarah Dawes
Publisher

HONGIK UNIVERSITY

Seoul Campus: 94 Wausan-ro, Mapo-gu, Seoul, 04066, Korea Tel. 82-2-320-1114 Fax 82-2-320-1122
Sejong Campus: 2639 Sejong-ro, Jochiwon-eup, Sejong, 30016, Korea Tel. 82-44-860-2114 Fax 82-41-860-2238

Certificate No. D1 - 824
Date of issue May 28, 2019

CERTIFICATE OF SCHOLASHIP AWARD

To whom it may concern :

Name in full REHMAT ULLAH
Sex Male
Date of birth [redacted]
Date of admission March 01, 2016
Date of graduation
School Graduate School
Major

This is to certify that the above-mentioned person was awarded the following scholarships with excellent records.

Kind of Scholarship	Year	Period		Amount
Hongik scholarship	2016	1st	₩	7,311,000
Hongik scholarship	2016	2nd	₩	6,315,000
Hongik scholarship	2017	1st	₩	6,403,000
Hongik scholarship	2017	2nd	₩	6,403,000
		Total	₩	**26,432,000**

Sang Ju Park
Dean, Academic Affairs
HONGIK UNIVERSITY

T/AS : Teaching Assistant Scholaship, R/AS : Research Assistant Scholaship, R/A : Research Assistant

본 증명서는 www.citech.kr 에서 위변조 검증 프로그램을 다운받아 확인하실 수 있습니다. You can check the original with download a verification program from www.citech.kr

Fakultät für Technik & Informatik
Prof. Dr. Thomas C. Schmidt

Hochschule für Angewandte Wissenschaften Hamburg
Hamburg University of Applied Sciences

HAW Hamburg
Fakultät TI
Berliner Tor 7
D-20099 Hamburg
Germany

Email:
t.schmidt@haw-hamburg.de

Fon:
+49-40-42875-8452

Mr.
Rehmat Ullah

Broadband Convergence Networks Lab
Department of Electronics and Computer Engineering
Hongik University
Sejong, South Korea

Invitation Letter for Mr. Rehmat Ulla's attendance to ICN 2017, Sep. 26-28 2017 in Berlin, Germany

2017-09-07

Dear Mr. Ullah,

as the general chair of the ACM Conference on Information-Centric Networking (ICN 2017, http://conferences.sigcomm.org/acm-icn/2017/), I am pleased to confirm that you are awarded with a geo-diversity grant of the Association of the Computing Machinery (ACM) for participation in ICN 2017. It is therefore a great pleasure for me to invite you to attend the ICN conference in Berlin.

ICN, the ACM Conference on Information-Centric Networking, is the premier conference covering all aspects of the emerging field of Information-Centric Networking. ICN 2017 is organized by the SIGCOMM special interest group of the Association of the Computing Machinery (ACM). ICN 2017, the fourth edition of this conference series, will be held in Berlin, Germany in September 26-28, 2017.

I sincerely wish you will be able to obtain a visa successfully to visit Germany for the conference and we look forward to meeting you in Berlin soon.

Sincerely

Thomas C. Schmidt

Prof. Dr. Thomas Schmidt, General Chair of ICN 2017

Association for Computing Machinery

Advancing Computing as a Science & Profession

July 6, 2018

TO: Hungary Consulate
Republic of Korea

RE: Rehmat Ullah
Broadband Convergence Networks Laboratory
Building D, Room D425, 2369, Sejong-ro
Jochiwon-eup, Sejong-si, 30016, 30016, Republic of Korea

The Association for Computing Machinery (ACM) is a non-profit international scientific and educational organization dedicated to advancing the art, science, engineering, and application of information technology, serving both professional and public interests by fostering the open interchange of information and by promoting the highest professional and ethical standards. ACM will be sponsoring The ACM Special Interest Group on Data Communication (SIGCOMM 2087), from August 20-25, 2018, at Vigadó, in Budapest, Hungary, under the leadership of the ACM Special Interest Group on Data Communication (SIGCOMM). Attendance is open to all those interested in the subject matter.

SIGCOMM is the flagship annual conference of the ACM Special Interest Group on Data Communication (SIGCOMM) on the applications, technologies, architectures, and protocols for computer communication.

Rehmat Ullah will be partially funded to attend SIGCOMM 2018. Rehmat Ullah has been awarded a SIGCOMM 2018 Travel Grant of $1500 USD to cover conference expenses, including registration, travel and accommodation.

The importance of computing to the future is unquestioned, and the critical role of the computing professional is constantly changing. ACM's broad array of life-long learning and skill development opportunities include tutorials, workshops, conferences, online books, online courses, and the ACM Digital Library. This extensive range of options and opportunities make it possible for computing professionals to keep abreast of technology and maintain a competitive advantage.

The Association for Computing Machinery (ACM) is the world's leading educational and scientific computing society and the resource for lifelong learning in the rapidly changing field.

Sincerely,

Carolina Erazo

Carolina Erazo
SIG Services

2 Penn Plaza, Suite 701
New York, NY 10121-0701

Tel: +1-212-869-7440
Fax: +1-212-944-1318

acmhelp@acm.org
www.acm.org

Hi,

You have been selected to receive an NSF Student Travel Grant to attend HotMobile 2019.

Your award amount is $960.

This is the maximum amount for which you may be reimbursed. Eligible expenses for reimbursement include advance student registration, hotel, and air travel. Expenses that are not eligible for reimbursement include regular and/or on-site registration, meals, and local transportation (taxis, shuttles, parking, etc.).

1. Register for the workshop early! The early registration deadline is **February 1st**.
2. Book your hotel at a discounted rate here: http://www.hotmobile.org/2019/index.php?id=travel

The hotel is filling up, so we suggest that you book your hotel room immediately. To help reduce your travel costs, we encourage you to get in touch with other grant recipients for room sharing. You may do that through the SIGMOBILE facebook page.

Please make sure to keep all original receipts so that you can be reimbursed. If you book a flight, you must use a U.S. flag carrier for air travel in order to be reimbursed. We will email you in the near future with instructions for how to obtain your reimbursement.

We look forward to meeting you at HotMobile!

Best regards,

Felix Lin, on behalf of the HotMobile Student Travel Grant Committee

SH

Sigcomm19-Travel-Grant HotCRP <noreply@sigcomm19travel.hotcrp.com>
Wed 7/3, 9:03 AM
Rehmat Ullah; timwood@gwu.edu; fdong@seu.edu.cn; hanjinsong@zju.edu.cn

Dear Rehmat Ullah,

Congratulations on receiving Travel Grant to attend SIGCOMM 2019.
The grant will provide 900 USD towards your expenses at the conference.
Travel grant awards are meant to partially cover the cost of attending and participating in SIGCOMM 2019. The only travel expenses that reimbursements can be used towards are: air transportation, hotel, and conference registration.

Note that you will need to pay for the expenses ahead of time and get reimbursed after the conference. In order to ensure your travel expenses can be reimbursed, you must carefully follow our travel requirements. We will send you full instructions on how to submit for reimbursements at a later date, but for now please be sure to follow these rules:

1) To accept the award you must reply to timwood@gwu.edu， fdong@seu.edu.cn and hanjinsong@zju.edu.cn to confirm you plan to attend. Please respond by July 6th so that we can pass the funds on
to other students if you no longer can attend.
2) Only hotel, airfare, and registration costs will be reimbursed
3) All receipts must be itemized, be cautious of booking sites that "bundle" packages. Some do not offer itemized receipts.

Full details on how to get reimbursed will be provided in the coming weeks.
We encourage you to begin booking your travel arrangements and visa application as soon as possible.

Best regards,
Sigcomm Travel Grant Committee

DONG A UNIVERSITY
Building roads to success

DS&XAI INTERNATIONAL CHAIR
TOWARDS RESPONSIBLE AI & DS FOR INDUSTRY 5.0
SINCE 2019

IAD

ensait ROUBAIX ECOLE D'INGENIEURS TEXTILE | Université de Lille

gemtex ROUBAIX LABORATOIRE DE RECHERCHE TEXTILE

INTERNATIONAL CHAIR

DATA SCIENCE & EXPLAINABLE ARTIFICIAL INTELLIGENCE

Develop a roadmap that starts from Industry 4.0 to reach Industry 5.0, focusing on theoretically and computationally solid techniques of DS and XAI with a wide class of applications in Manufacturing, Healthcare, Business and Finance

INTERNATIONAL CHAIR IN DS & XAI

HONORARY HEAD & CHAIR HOLDER
Senior Assoc. Prof. Kim Phuc TRAN
GEMTEX - ENSAIT, Graduate School MADIS-631, University of Lille, France,
Senior Scientific Advisor, Dong A Univ. & IAD, Vietnam

HEAD OF CHAIR & SCIENTIFIC DIRECTOR
Assist. Prof. Kim Duc TRAN
IAD, Dong A Univ., Vietnam
GEMTEX - ENSAIT, Graduate School MADIS-631, University of Lille, France

Administrative Dept.

Permanent External Scientific Advisory Commission

MEMBER
Prof. Cédric HEUCHENNE
HEC - University of Liège, Belgium

MEMBER
Prof. Xianyi ZENG
GEMTEX - ENSAIT, Graduate School MADIS-631, University of Lille, France

MEMBER
Prof. Damien SOULAT
GEMTEX - ENSAIT, Graduate School MADIS-631, University of Lille, France

MEMBER
Prof. Bruno AGARD
Ecole Polytechnique de Montréal, Canada

MEMBER
Prof. Hongmei HE
University of Salford, UK

MEMBER
Prof. Sébastien THOMASSEY
GEMTEX - ENSAIT, Graduate School MADIS-631, University of Lille, France

MEMBER
Prof. Narayanaswamy BALAKRISHNAN
McMaster University, Canada

MEMBER
Prof. Jaafar GABER
Université de Technologie de Belfort-Montbéliard; FEMTO-ST Institute, France

BA. Luc NGUYEN T.
IAD, Dong A Univ., Vietnam
Secretary

LL.M. Ngoc Minh T. DANG
IAD, Dong A Univ., Vietnam
Administrative staff

SENIOR MEMBERS

SENIOR MEMBER
Prof. Frederic VANDERHAEGEN
Univ. of Polytechnic , Haut-de-France, France

SENIOR MEMBER
Prof. Slim HAMMADI
Centrale Lille Institut France, Lab CRISTAL-OSL; CNRS; co-leader of ELODI Chair, France

SENIOR MEMBER
Prof. Ludovic KOEHL
GEMTEX - ENSAIT, Graduate School MADIS-631, University of Lille, France

SENIOR MEMBER
Prof. Abdessamad KOBI
University of Angers, France

SENIOR MEMBER
Prof. Giovanni CELANO
University of Catania, Italy

SENIOR MEMBER
Prof. Pascal BRUNIAUX
IAD, Dong A University, Vietnam

SENIOR MEMBER
Prof. Thi Le Hoa VO
Université de Rennes, France

SENIOR MEMBER
Prof. Arne JOHANNSSEN
Harz University of Applied Science, Germany

SENIOR MEMBER
Prof. Sidharta GAUTAMA
University of Ghent, Belgium

SENIOR MEMBER
Prof. Michael Khoo Boon CHONG
Universiti Sains Malaysia, Malaysia

SENIOR MEMBER
Prof. Salah Bourennane
Dean of Research at Ecole Centrale Méditerranée, France

SENIOR MEMBER
Senior Assoc. Prof. Laetitia ROUX
University of Lille, France

SENIOR MEMBER
Assoc. Prof. Ramla SADDEM
EISINE School of Industrial and Digital Sciences Engineering, URCA, France

SENIOR MEMBER
Assoc. Prof. Mai Huong BUI
Ho Chi Minh City University of Technology, Vietnam

SENIOR MEMBER
Assist. Prof. Wei Lin TEOH
Heriot-Watt University Malaysia, Malaysia

SENIOR MEMBER
Assist. Prof. Athanasios 'Sakis' RAKISZIS
Univ. of Piraeus, Univ. of the Aegean, Greece

SENIOR MEMBER
Assist. Prof. Rehmat Ulla KHAN
Newcastle Unive., UK; URCA, France